NJDOT EE# 0248-92

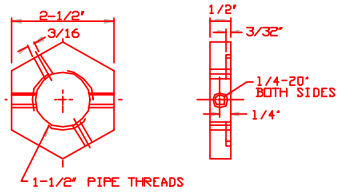

HEX LOCK NUT

MATERIAL: BRONZE, 85-5-5-5

WIRE OUTLET

MATERIAL: BRONZE, 85-5-5-5

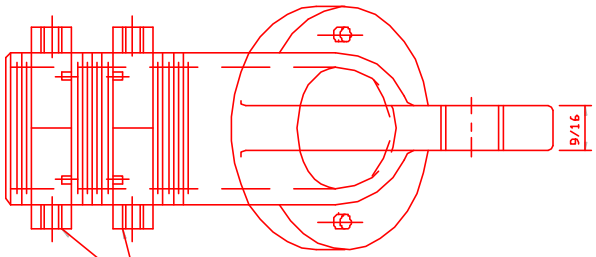

HEX LOCK NUTS - BRONZE FURNISH (2) WITH EACH OUTLET NUTS TO BE PROVIDED WITH 4 MM DP BY 5 MM WIDE SLOT FOR SERRATED RING; DRILL & TAP 1/4-20 x 3/8" FOR (2) STN. STL. SOC. HD. SET SCR, ONE EACH SIDE.

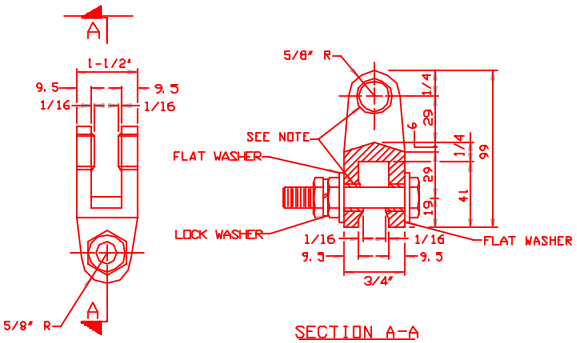

UNIVERSAL JOINT

MATERIAL - BRONZE, 85-5-5-5

SECTION A-A

NOTE:

DRILL CASTING FOR C3D4 STN. STL. 1/16" WALL BUSHINGS, FURNISH & PRESS FIT INTO CASTING.

FURNISH WITH EACH UNIVERSAL JOINT:
(1) 5/8 x 3" STN. STL. HEX BOLT
(2) 5/8" STN. STL. HEX NUTS
(2) 5/8" STN. STL. FLAT WASHER
(1) 5/8" STN. STL. LOCK WASHER

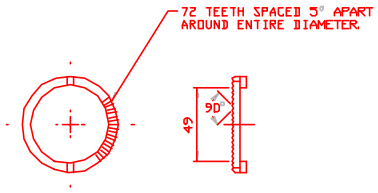

NOTE:

SERRATED POSITIONING RING TO BE PROVIDED WHEN TRAFFIC SIGNAL IS DIRECTLY ATTACHED TO WIRE OUTLET FITTING.

DETAIL OF HEAD POSITIONING RING

MATERIAL: DELRIN

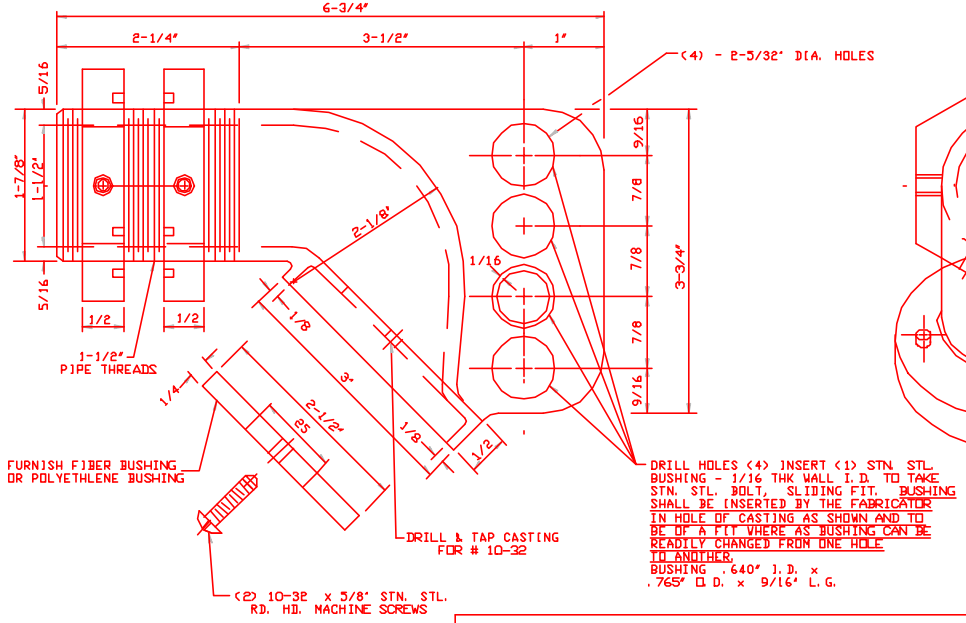

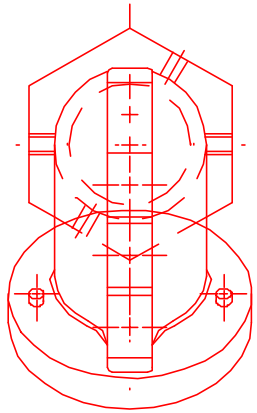

NJDOT BRONZE TRUSS HANGER

Signal Control Products, Inc.
199 Evans Way, Branchburg, NJ 08876-4600
Ph: 908-231-1133 Fax: 908-707-0333

NOTES:

1. ON INSTALLATION THE CONTRACTOR SHALL PLACE THE BUSHING IN THE APPROPRIATE MOUNTING HOLE AS REQUIRED TO OBTAIN VERTICAL POSITIONING AND MAXIMUM VISIBILITY OF THE SIGNAL ASSEMBLY TO THE APPROACH ROADWAY AND AS DIRECTED BY THE ENGINEER.