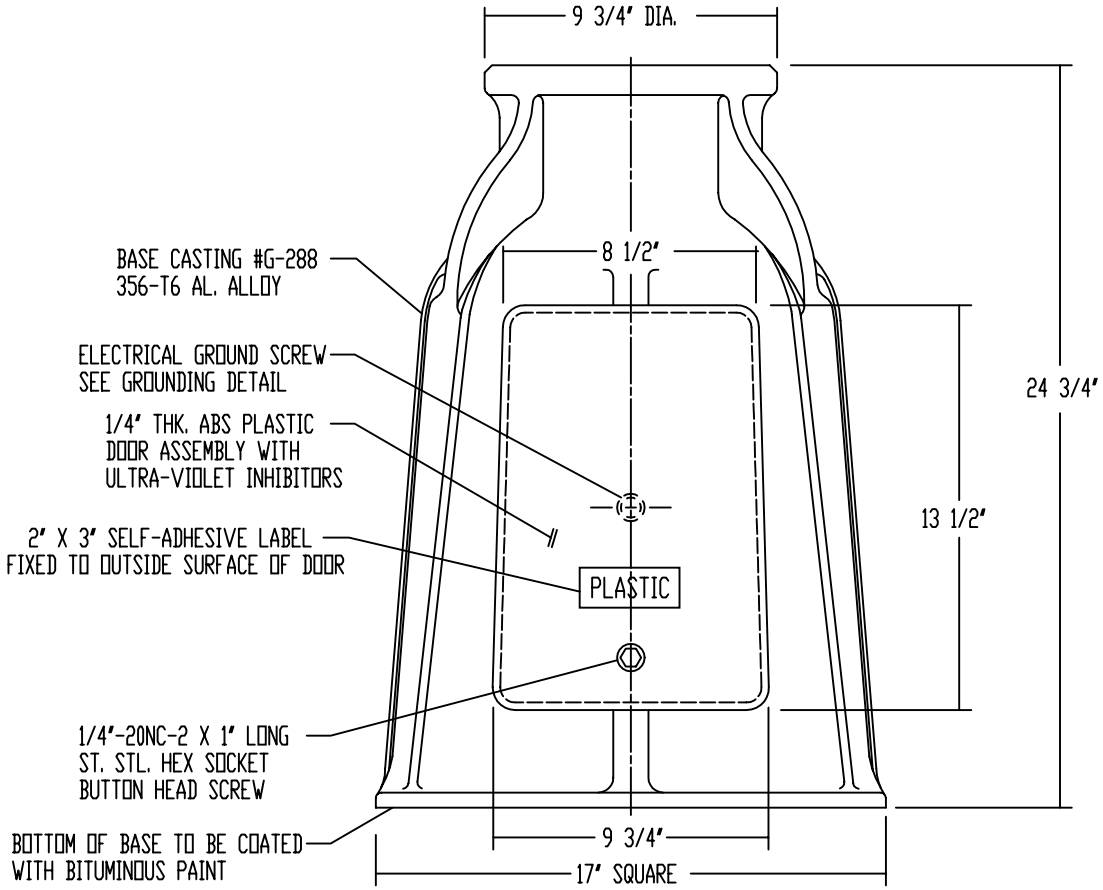


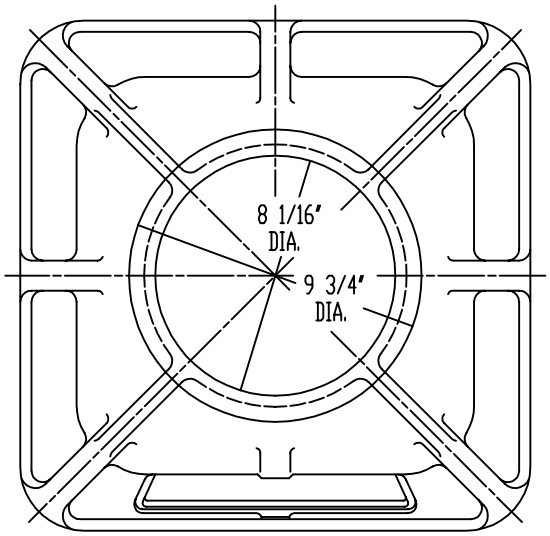


TOP VIEW

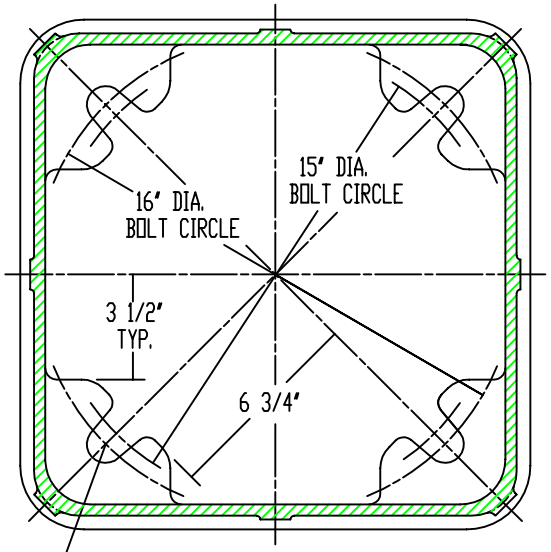


BOTTOM VIEW

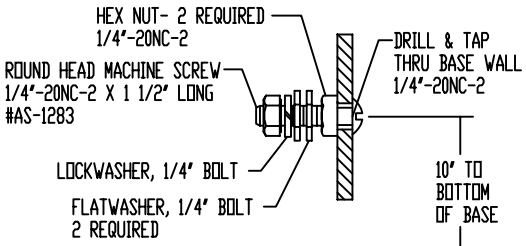


ELECTRICAL GROUNDING DETAIL
(ALL HARDWARE STAINLESS STEEL - PASSIVATED)

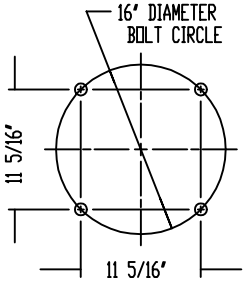


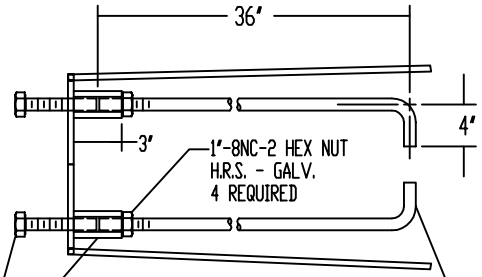


1"-8NC-2 X 3" LONG HEX HEAD BOLT, LOCKWASHER AND FLATWASHER - H.R.S. - GALV. (4 OF EACH REQUIRED)

1"-8NC-2 X 3" LONG HEX COUPLING H.R.S. - GALVANIZED (4 REQUIRED)

1" DIA. X 40" LONG ANCHOR ROD (4 REQUIRED). ANCHOR ROD TO BE 55,000 PSI MIN. YIELD STRENGTH PER AASHTO M314-90, GRADE 55. TOP 12" OF ROD TO BE GALVANIZED PER AASHTO M232 CLASS C, (ASTM A 153).

P&K

| ALT. | DESCRIPTION | DATE | BY | CH |
|---|---|---|---|---|

MATERIAL

STOCK SIZE

FINISH OR TEMPER

CUSTOMER: BERGEN COUNTY DEPT. OF PUBLIC WORKS

P&K POLE PRODUCTS, INC.
84 Foundry St., Newark, N.J.

TITLE: " TB-1R/BERGEN "
BERGEN CODE TB-8

DR. M.M.S. 04-12-94
CK. W.W.W. 04-12-94
APP.

SCALE: NONE

DWG. NO. C-80109-1