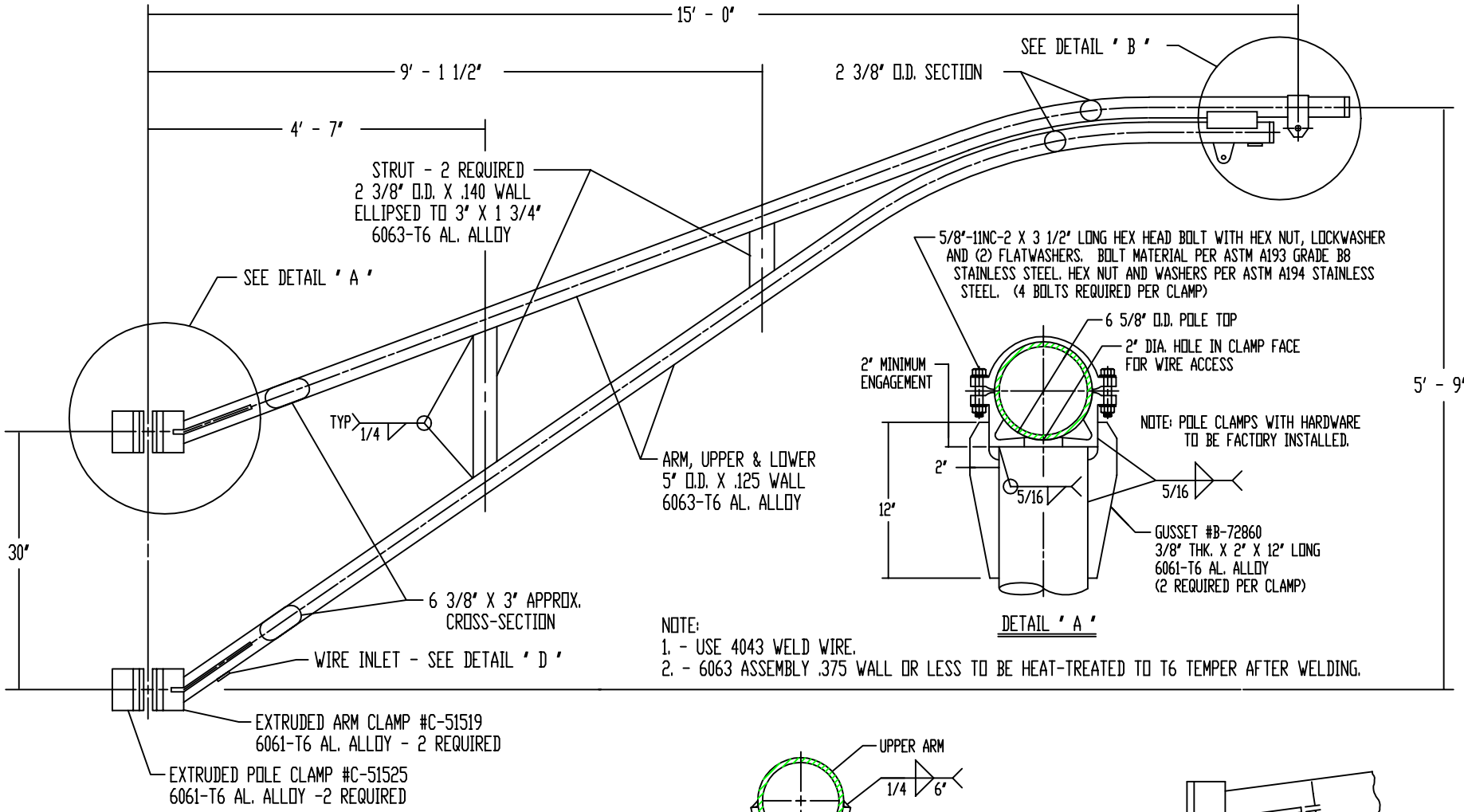

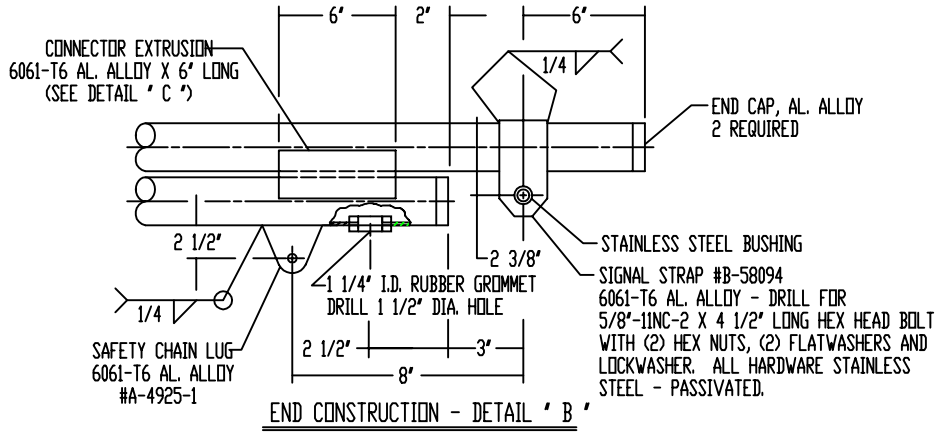

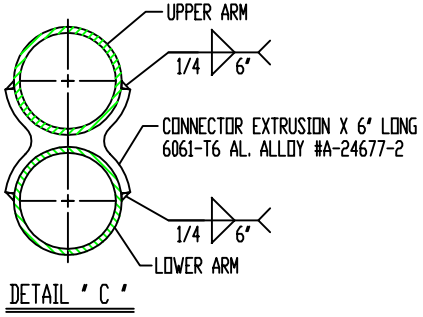

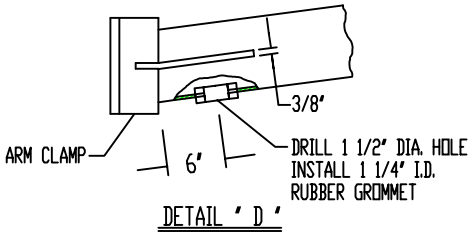

P&K

ALT.	DESCRIPTION	DATE	BY	CH

MATERIAL
STOCK SIZE
FINISH OR TEMPER
CUSTOMER: BERGEN COUNTY DEPT. OF PUBLIC WORKS

P&K POLE PRODUCTS,INC.
84 Foundry St., Newark NJ

TITLE: BERGEN CODE " MA15-08 "
MA1550566-70

DR. M.M.S. 05-12-95
CK. W.W.W. 05-12-95
APP.

SCALE: NONE

DWG. NO. C-105467